ADARA

Caratteristiche generali
Acciaio inox (AISI 304) spazzolato. Filtro antigrasso metallico, asportabile e lavabile. Filtro carbone. Pulsantiera elettronica. Finitura in vetro acidato temperato.

General features
Scotch brite Stainless steel (AISI 304). Metallic grease filter, removable and washable. Charcoal filter. Electronic optical control. Etched tempered glass.

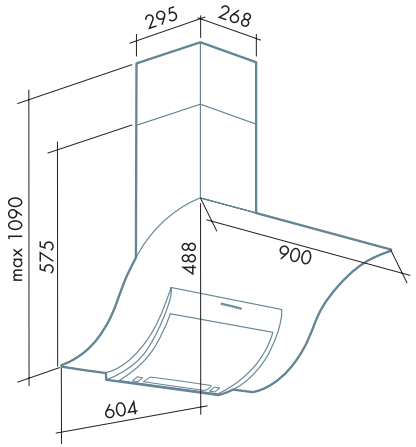

Filtro sagomato modello "ADARA"
"ADARA" shaped filter

	motore e comandi / motor and control			filtri / filters			illuminazione / lighting					
isola/island	450 m³/h 3 vel.	600 m³/h 3 vel.	800 m³/h 4 vel.	"Base"	"Design"	carbone/charcoal	Halogen lamp		Dicroica lamp		Incandescent lamp	Fluorescent lamp
/												
/												
/												
parete/wall												
/												
90		P.EL.	P.EL.		Adara	3						1 x 8 Watt
/												

ACCESSORI OPZIONALI DISPONIBILI: Aspiratore sottotetto (solo versione 800 m³/h) - Aspiratore esterno (solo versione 800 m³/h) - Salvietta *Magic Steel*
AVAILABLE OPTIONAL ACCESSORIES: Under-roof extractor fan (only 800 m³/h version) - Outdoor extractor fan (only 800 m³/h version) - *Magic Steel* protective and cleaning wipe

ADARA

Design

new

600 | 800

AISI 304